	REVISION DESCRIPTION	CHECK	APP	DATE	REV.NOTICE.NO
△1					
△2					
△3					

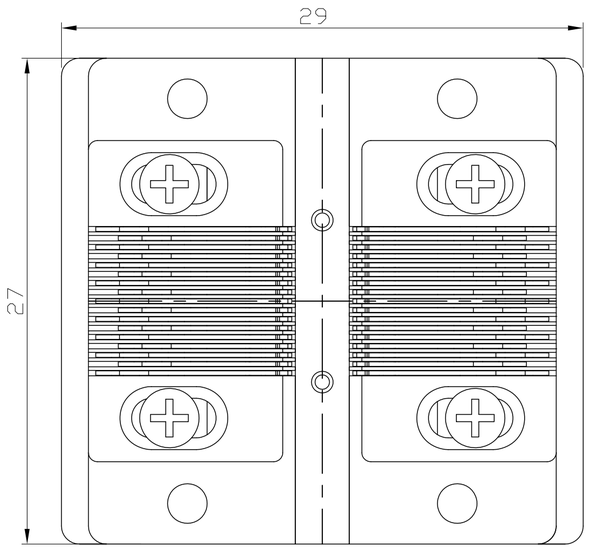

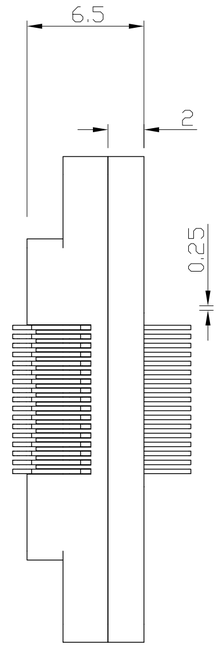

PCB PATTERN (TOP VIEW)

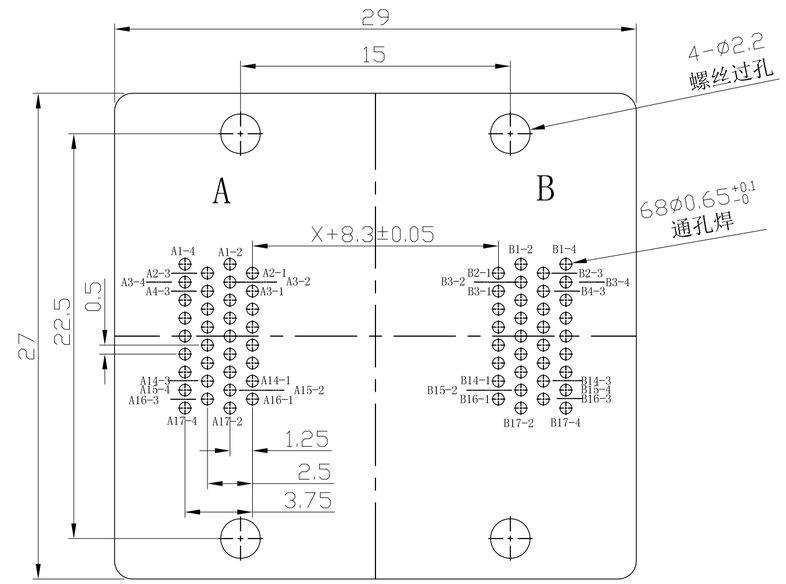

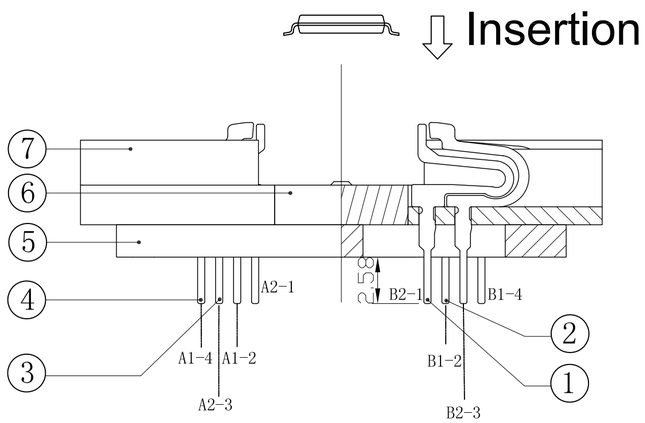

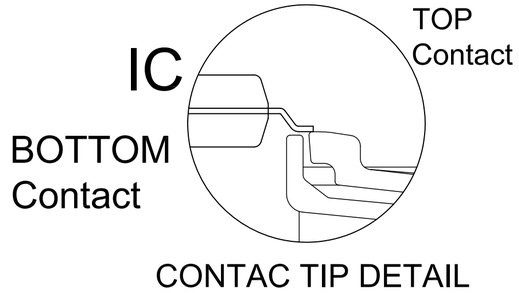

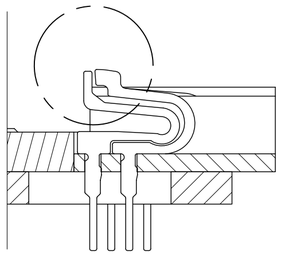

SEC.A-A
Contact Retracted

SEC.A-A

CONTACT LEAD
W0.5XT0.3

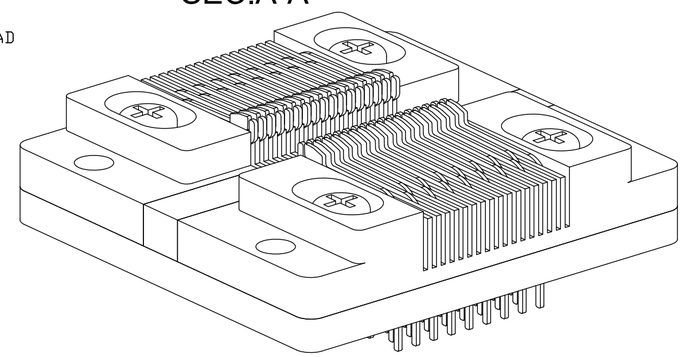

PERFORMANCE

1、Insulation Resistance: 1000mΩ Min.At DC 500V
2、Dielectric Withstanding Voltage For 1 Minute At AC 700V
3、Contact Resistance 30mΩ MAX。at 10mA and 20mV MAX.(Initial)
4、Current Rating: 1A max.
5、Operation Temperature -55°C ~+175°C
6、Life Span 15,000 Times (Mechanical)
7、Operation Force 1.0 Kg MAX

APPL ICABLE IC

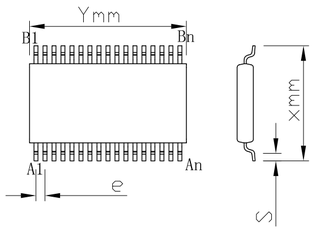

	min	max
An	/	17
Bn	/	17
W	1	9
X	3.6	8.4
S	0.3	/
Y	1.3	/
e	0.5	

W=(An+Bn)/4

No	Part Number	Name	Material	Q/ty	Note
7	SOP-28-U01-003	COVER	PEI/PES	2	BLACK
6	SOP-28-U01-002	SPACERS	PEI/PES	1	BLACK
5	SOP-28-U01-001	BASE	PEI/PES	1	BLACK
4	SOP-28-MSBR-04	CONTACT	BeCu	W/W+0.5	Au PLATING
3	SOP-28-MSBR-03	CONTACT	BeCu	W/W-0.5	Au PLATING
2	SOP-28-MSBR-02	CONTACT	BeCu	W/W+0.5	Au PLATING
1	SOP-28-MSBR-01	CONTACT	BeCu	W/W-0.5	Au PLATING

TOLERANCE	PROJECTION	GENERAL TOLERANCES ±0.10	TITLE	SOP34-0.5 SOCKET
		REV A	CLASS	**SOP34-0.5-TP01NT**
X. ±0.50	DIMENSION: mm	SCALE: 1:1	DRW. NO	**0915703**
X.X ±0.25	APP:	DATE:		
X.XX ±0.10	CHECK:	DATE:		
X.XXX ±0.05	DEGK: ENG02	DATE: 2022/12/21		