	REVISION DESCRIPTION	CHECK	APP	DATE	REV. NOTICE. NO
△1					
△2					

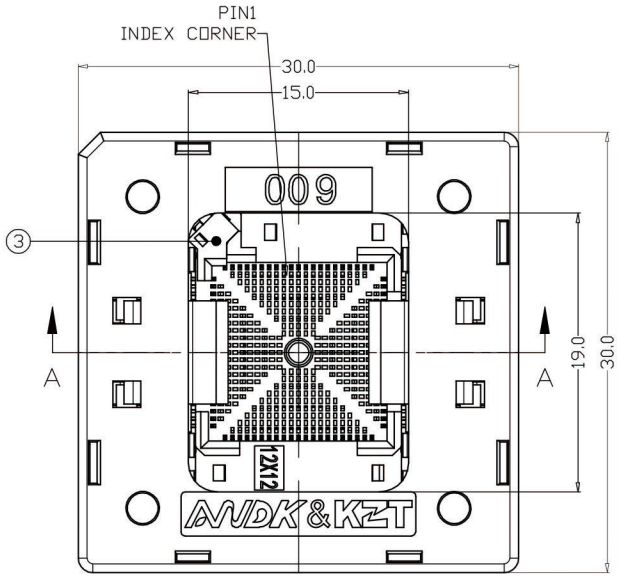

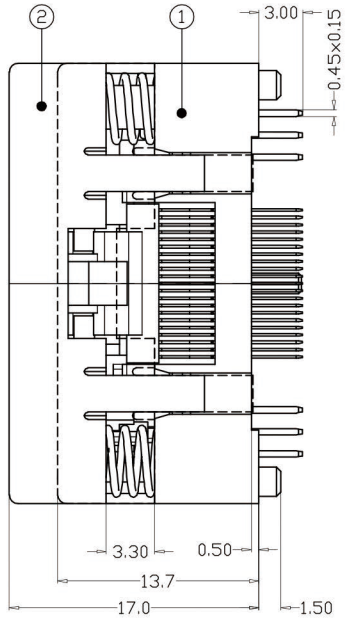

PCB PATTERN (TOP VIEW)

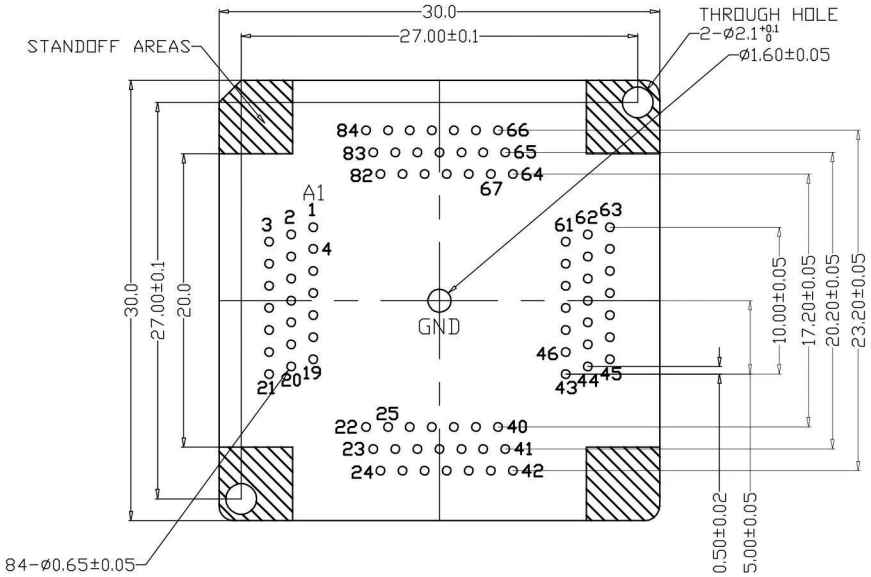

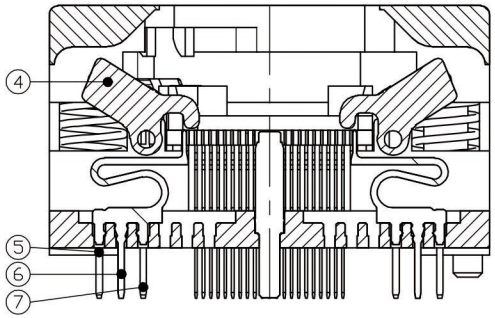

SECTION A–A

PERFORMANCE

1. Insulation Resistance: 1000 MΩ or more At 500VDC
2. Dielectric withstanding Voltage: For 1 Minute At 700VAC
3. Contact resistance: 50 mΩ or less at 10 mA and 20 mV MAX (Initial)
4. Operation Temperature: -55°C~+155°C
5. Operation Force: 3.0±0.3kg
6. Contact Force: 20-28g Per Pin
7. Current Rating: 1A max.
8. Life Span: 100,000 Times (Mechanical)

APPL ICABLE IC

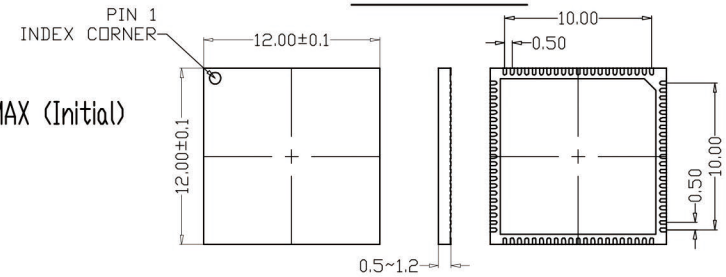

TOP VIEW SIDE VIEW BOTTOM VIEW

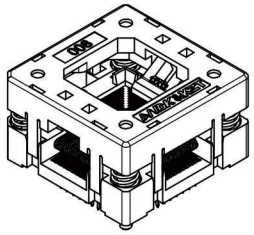

No	Part Number	Name	Material	Q/ty	Note
7	QFN-009-F05-03	CONTACT	BeCu	28	Au PLATING
6	QFN-009-F04-02	CONTACT	BeCu	28	Au PLATING
5	QFN-009-F03-01	CONTACT	BeCu	28	Au PLATING
4	QFN-009-F02-001	BLOCK	LCP	2	WHITE
3	QFN-009-F01-001	BLOCK	LCP	1	WHITE
2	QFN-009-G01-001	COVER	PEI/PES/PPS	1	BLACK
1	QFN-009-U01-001	BASE	LCP	1	WHITE

TOLERANCES	PROJECTION	GENERAL TOLERANCES	±0.10	TITLE	QFN84-0.5-0091TGH(12x12)
		R E V	A	CLASS	
X. ±0.50	DIMENSION: mm	SCALE: 1:1		DRW.NO	
X.X ±0.25	APP:	DATE:		ADK & KZT	
X.XX ±0.10	CHECK:	DATE:			
X.XXX±0.05	DEGK:	DATE:			