由 Autodesk 教育版产品制作

	REVISION DESCRIPTION	CHECK	APP	DATE	REV.NOTICE.NO
△1					
△2					
△3					

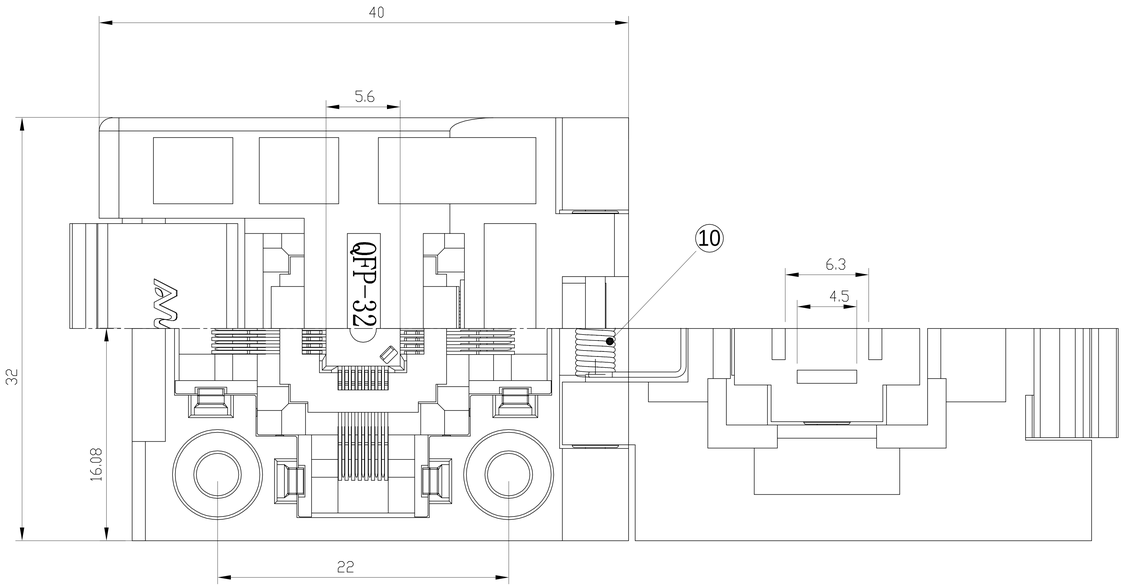

APPL ICABLE IC

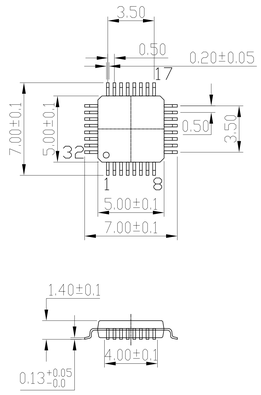

PCB PATTERN (TOP VIEW)

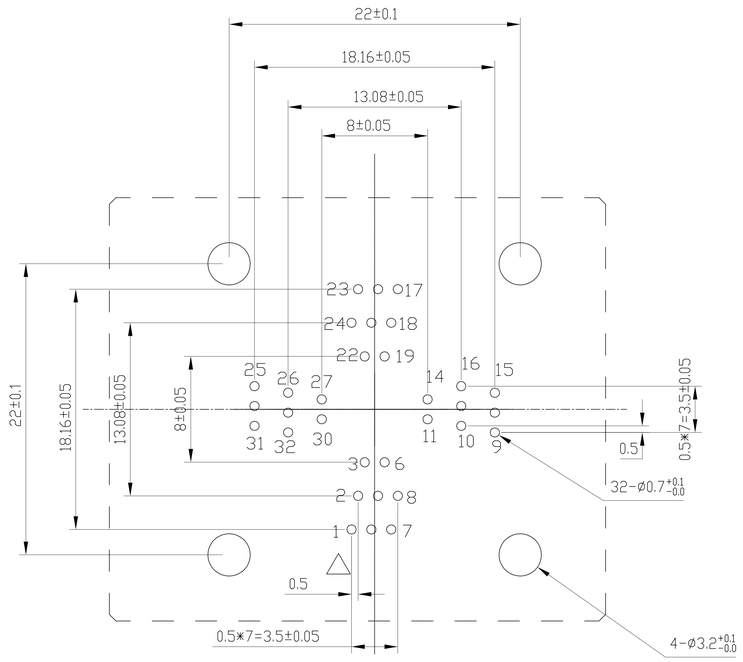

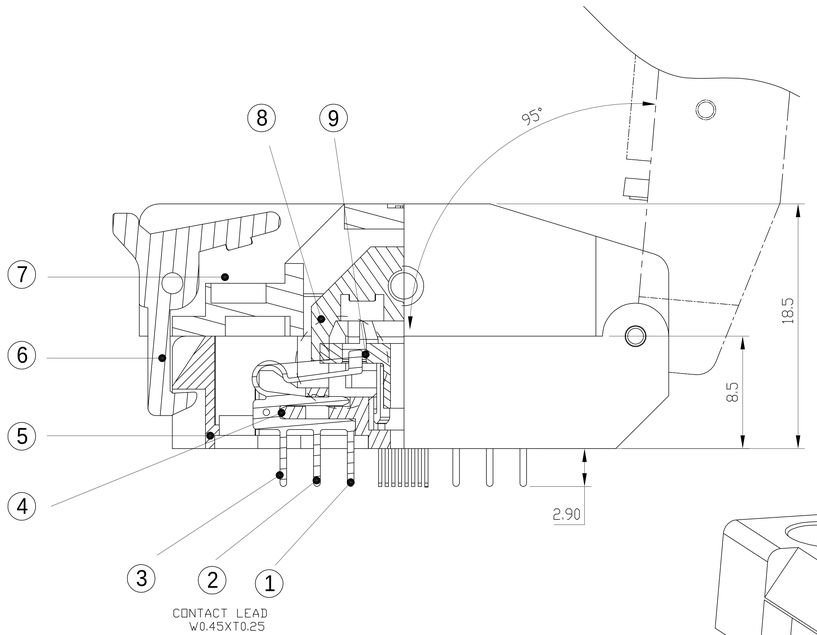

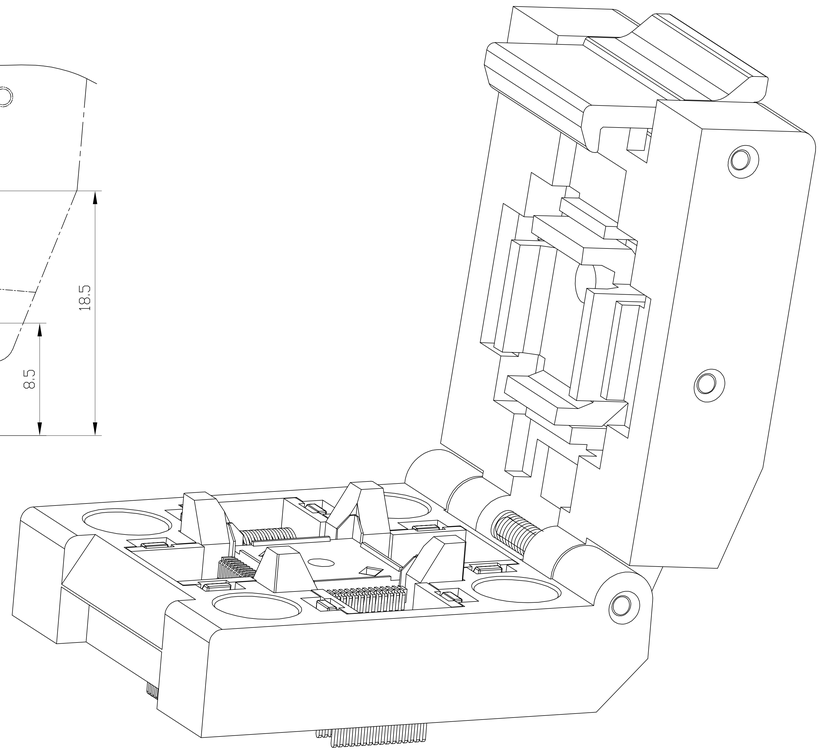

PERFORMANCE

1、Insulation Resistance: 1000MΩ Min.At DC 500V
2、Dielectric Withstanding Voltage For 1 Minute At AC500V
3、Contact Resistance(Initial) 30mΩ MAX at 10mA
4、Rated Current: 1.0A.
5、Operation Temperature range -65°C ~+150°C
6、Insertion Min10000 cycle (Mechanical)
7、Material: Body:PAI,PES; Contact:BeCu,Au plating(Ni-base)

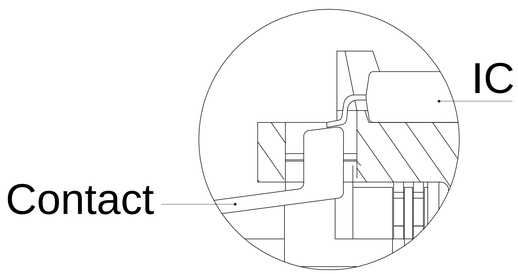

CONTAC TIP DETAIL

No	Part Number	Name	Material	Q/ty	Note
10	30-B-4515X	SPRING	SUS	1	FOR COVER
9	QFP32-0.5-FFC	FLOATING CARRIER	PEI/PES	1	BLACK
8	QFP32-0.5-FSB	SWINGING BLOCK	PEI/PES	1	BLACK
7	QFP32-0.5-FCR	COVER	PEI/PES	1	BLACK
6	QFP32-0.5-FLH	LATCH	PEI/PES	1	BLACK
5	QFP32-0.5-FBY	BODY	PEI/PES	1	BLACK
4	QFP32-0.5-FCE	CORE	PEI/PES	1	BLACK
3	QFP32-0.5-FCTC	CONTACT	BeCu	12	FOR COVER
2	QFP32-0.5-FCTB	CONTACT	BeCu	12	BLACK
1	QFP32-0.5-FCTA	CONTACT	BeCu	8	Au PLATING

TOLERANCE	PROJECTION	GENERAL TOLERANCES	±0.10	TITLE	QFP32-0.5 SOCKET
		REV	A	CLASS	QFP32-0.5-CP01NT
X. ±0.50	DIMENSION: mm	SCALE:	1:1	DRW.NO	01
X.X ±0.25	APP:	DATE:			
X.XX ±0.10	CHECK:	DATE:			
X.XXX ±0.05	DEGK: ENG03	DATE: 20150606			

由 Autodesk 教育版产品制作