由 Autodesk 教育版产品制作

	REVISION DESCRIPTION	CHECK	APP	DATE	REV.NOTICE.NO
△1					
△2					
△3					

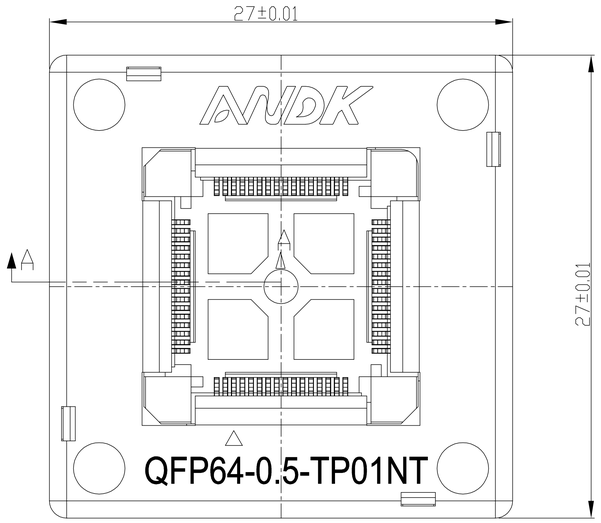

APPL ICABLE IC

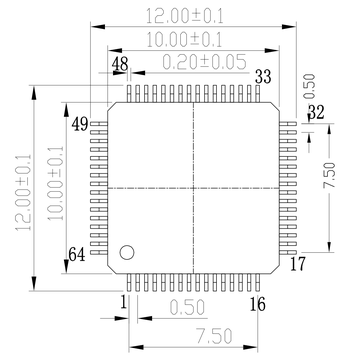

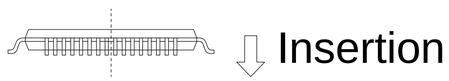

Insertion

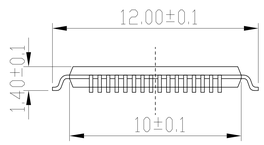

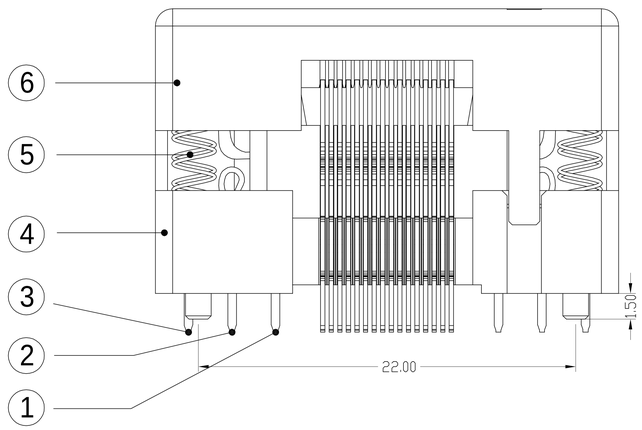

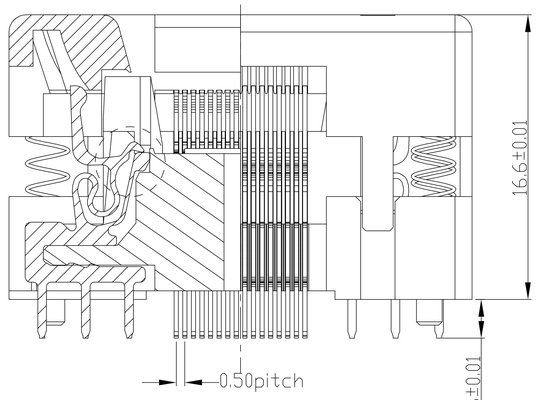

截面A－A

PCB PATTERN (TOP VIEW)

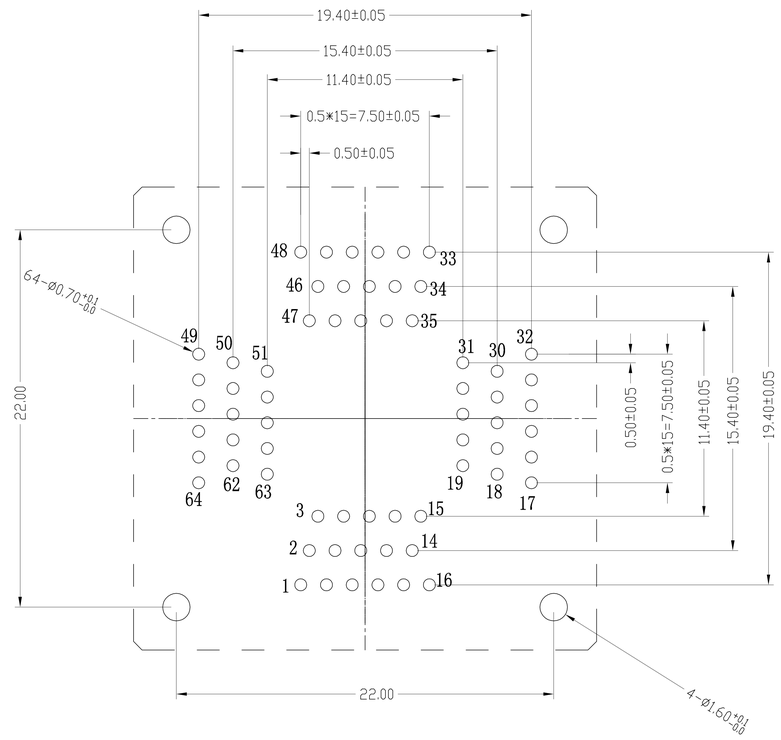

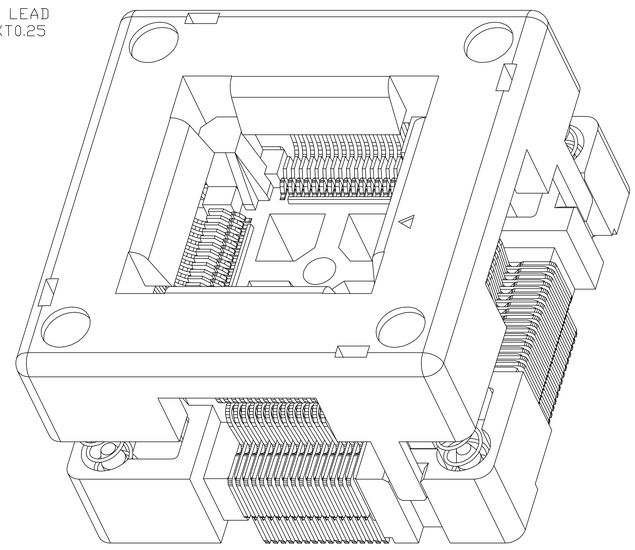

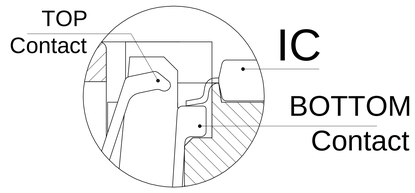

CONTAC TIP DETAIL

PERFORMANCE

1、Insulation Resistance: 1000MΩ Min.At DC 500V
2、Dielectric Withstanding Voltage For 1 Minute At AC500V
3、Contact Resistance(Initial) 100mΩ MAX at 10mA
4、Rated Current: 1.0A.
5、Operation Temperature range -65°C ~+150°C
6、Terminal strength against pulling 0.5Kg(1min)
7、Insertion Min10000 cycle (Mechanical)
8、Material: Body:PAI,PES; Contact:BeCu,Au plating(Ni-base)

No	Part Number	Name	Material	Q/ty	Note
6	QFP64-0.5-XCR	COVER	PEI/PES	1	BLACK
5	30-B-4515X	SPRING	SUS	4	FOR COVER
4	QFP64-0.5-XBY	BODY	PEI/PES	1	BLACK
3	QFP64-0.5-XCTC	CONTACT	BeCu	20	FOR COVER
2	QFP64-0.5-XCTB	CONTACT	BeCu	20	BLACK
1	QFP64-0.5-XCTA	CONTACT	BeCu	24	Au PLATING

TOLERANCE	PROJECTION	GENERAL TOLERANCES	±0.10	TITLE	QFP64-0.5 SOCKET
		R E V	A	CLASS	QFP64-0.5-TP01NT
X. ±0.50	DIMENSION: mm	SCALE: 1:1		DRW.NO	02
X.X ±0.25	APP:	DATE:			
X.XX ±0.10	CHECK:	DATE:			
X.XXX ±0.05	DEGK: ENG03	DATE: 20150606			

由 Autodesk 教育版产品制作