| | REVISION DESCRIPTION | CHECK | APP | DATE | REV. NOTICE. NO |
|---|---|---|---|---|---|
| △1 | | | | | |
| △2 | | | | | |
| △3 | | | | | |

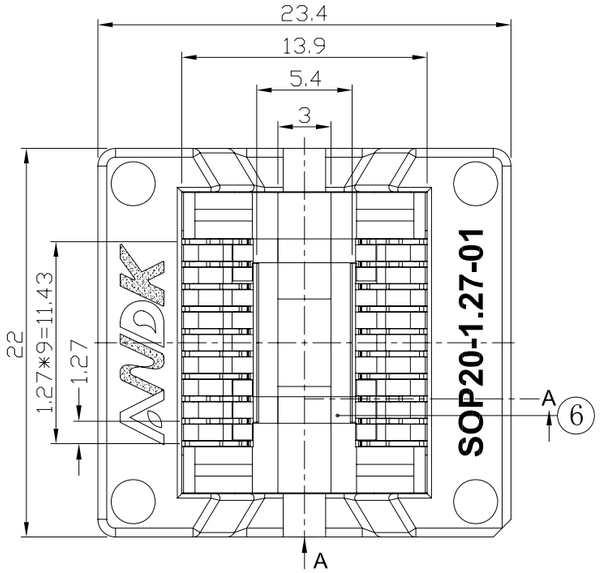


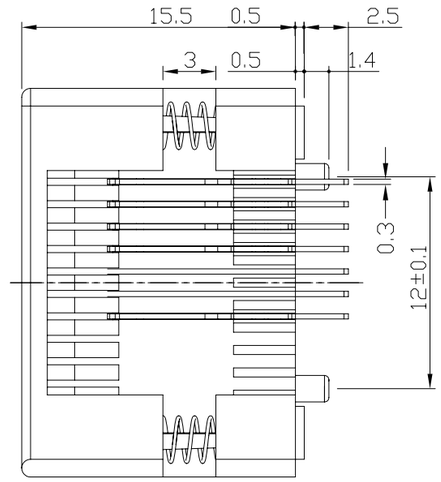


## PCB PATTERN (TOP VIEW)

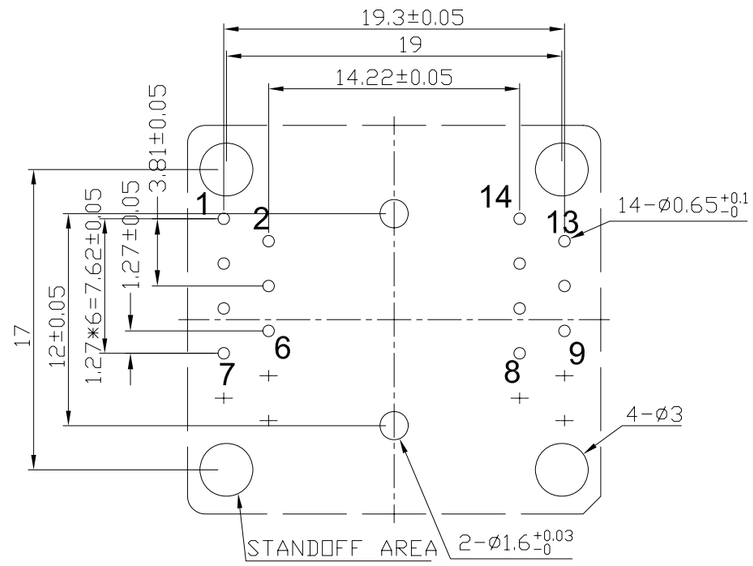


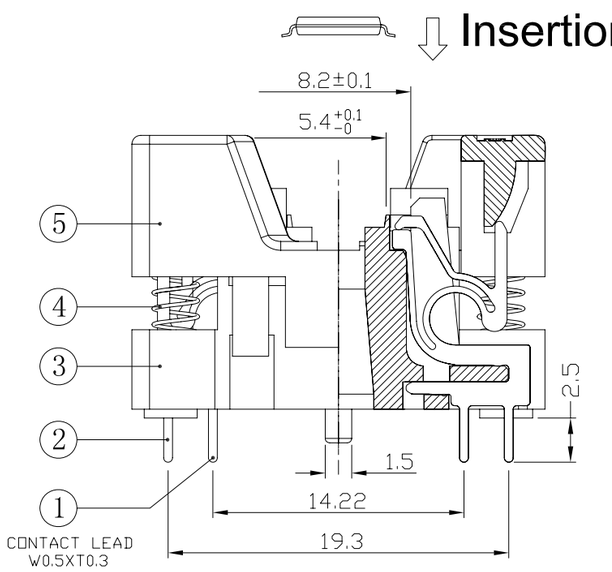


SEC.A-A

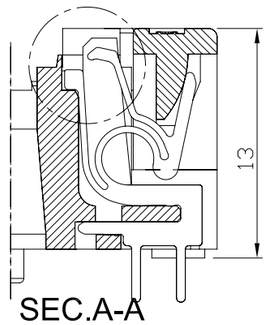


SEC.A-A
Contact Retracted

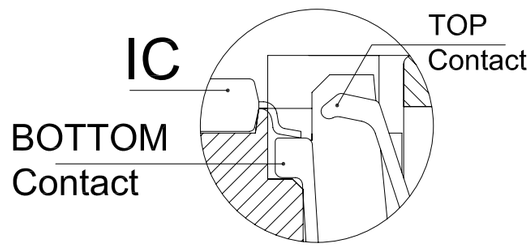


CONTAC TIP DETAIL

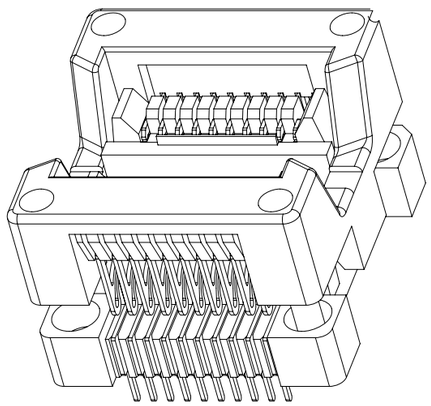

## PERFORMANCE

1、Insulation Resistance: 1000mΩ Min.At DC 500V
2、Dielectric Withstanding Voltage For 1 Minute At AC 700V
3、Contact Resistance 30mΩ MAX。at 10mA and 20mV MAX.(Initial)
4、Current Rating: 1A max.
5、Operation Temperature -55°C ~+125°C
6、Life Span 15,000 Times (Mechanical)
7、Operation Force 1.0 Kg MAX

## APPL ICABLE IC

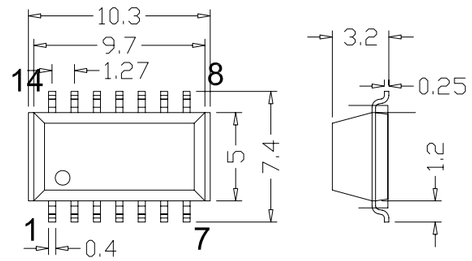


| No | Part Number | Name | Material | Q/ty | Note |
|---|---|---|---|---|---|
| 6 | SOP-20-U01-003 | ADAPTER | PEI/PES | 1 | BLACK |
| 5 | SOP-20-U01-002 | COVER | PEI/PES | 1 | BLACK |
| 4 | 30-B-4515X | SPRING | SUS | 4 | FOR COVER |
| 3 | SOP-20-U01-001 | BASE | PEI/PES | 1 | BLACK |
| 2 | SOP-20-MSBR-02 | CONTACT | BeCu | 7 | Au PLATING |
| 1 | SOP-20-MSBR-01 | CONTACT | BeCu | 7 | Au PLATING |

| | | | |
|---|---|---|---|
| TOLERANCE | PROJECTION | GENERAL TOLERANCES | ±0.10 |
| | | REV | A |
| X. ±0.50 | DIMENSION: mm | SCALE: 1:1 | |
| X.X ±0.25 | APP: | DATE: | |
| X.XX ±0.10 | CHECK: | DATE: | |
| X.XXX ±0.05 | DEGK: ENG02 | DATE: 20170318 | |

| | |
|---|---|
| TITLE | SOP20-1.27 SOCKET |
| CLASS | SOP14(20)-1.27-TP03NT |
| DRW. NO | SOP-14/16/20-1.27-M03 |

ANDK