	REVISION DESCRIPTION	CHECK	APP	DATE	REV. NOTICE. NO
△1					
△2					
△3					

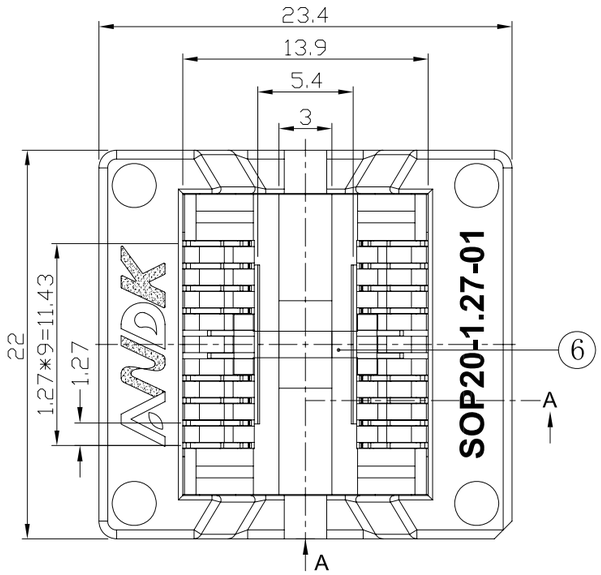

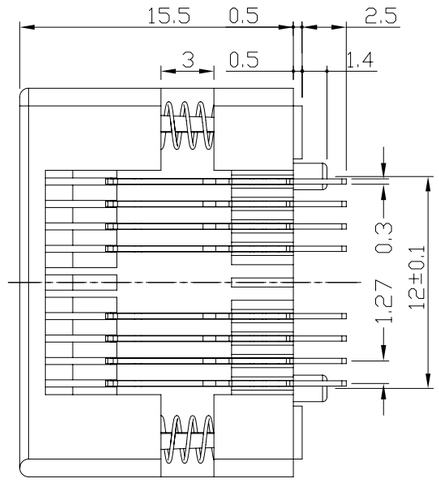

PCB PATTERN (TOP VIEW)

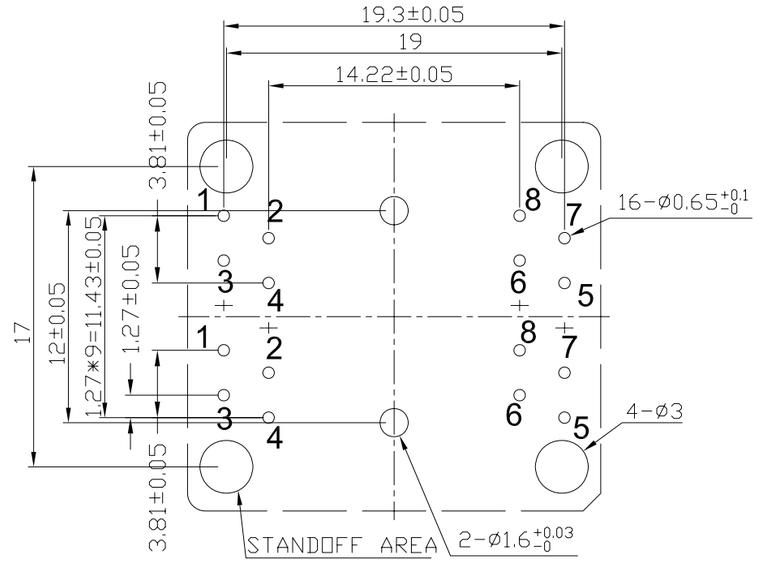

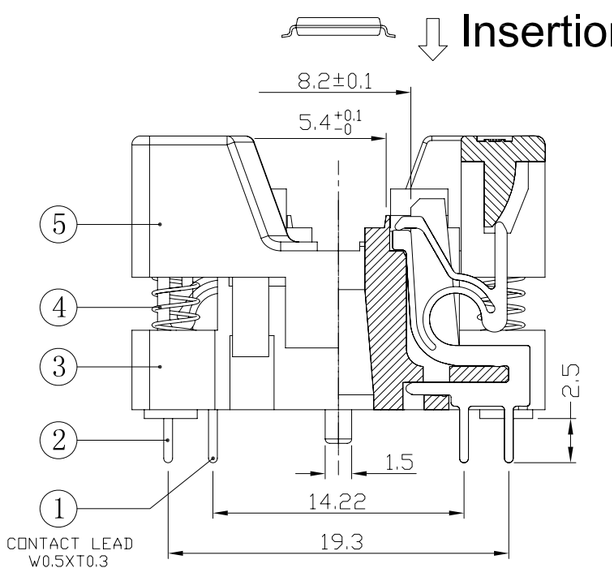

SEC.A-A

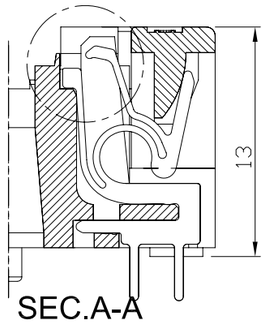

SEC.A-A
Contact Retracted

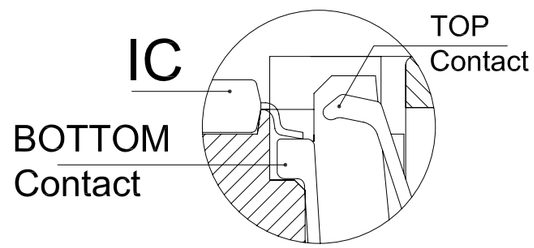

CONTAC TIP DETAIL

PERFORMANCE

1、Insulation Resistance: 1000mΩ Min.At DC 500V
2、Dielectric Withstanding Voltage For 1 Minute At AC 700V
3、Contact Resistance 30mΩ MAX。at 10mA and 20mV MAX.(Initial)
4、Current Rating: 1A max.
5、Operation Temperature -55°C ~+125°C
6、Life Span 15,000 Times (Mechanical)
7、Operation Force 1.0 Kg MAX

APPL ICABLE IC

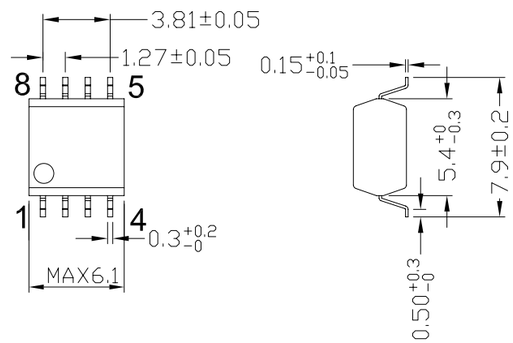

No	Part Number	Name	Material	Q/ty	Note
6	SOP-20-U01-003	ADAPTER	PEI/PES	1	BLACK
5	SOP-20-U01-002	COVER	PEI/PES	1	BLACK
4	30-B-4515X	SPRING	SUS	4	FOR COVER
3	SOP-20-U01-001	BASE	PEI/PES	1	BLACK
2	SOP-20-MSBR-02	CONTACT	BeCu	8	Au PLATING
1	SOP-20-MSBR-01	CONTACT	BeCu	8	Au PLATING

TOLERANCE	PROJECTION	GENERAL TOLERANCES	±0.10	TITLE	SOP20-1.27 SOCKET
		REV	A	CLASS	SOP8X2(20)-1.27-TP02NT
X. ±0.50	DIMENSION: mm	SCALE:	1:1	DRW. NO	OTS-16(20M)-1.27-01
X.X ±0.25	APP:	DATE:			
X.XX ±0.10	CHECK:	DATE:			
X.XXX ±0.05	DEGK: ENG02	DATE: 20170318			